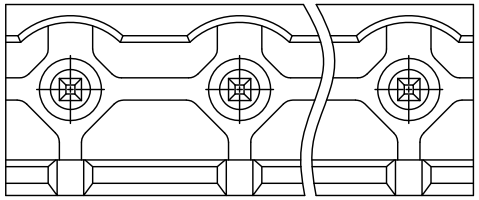

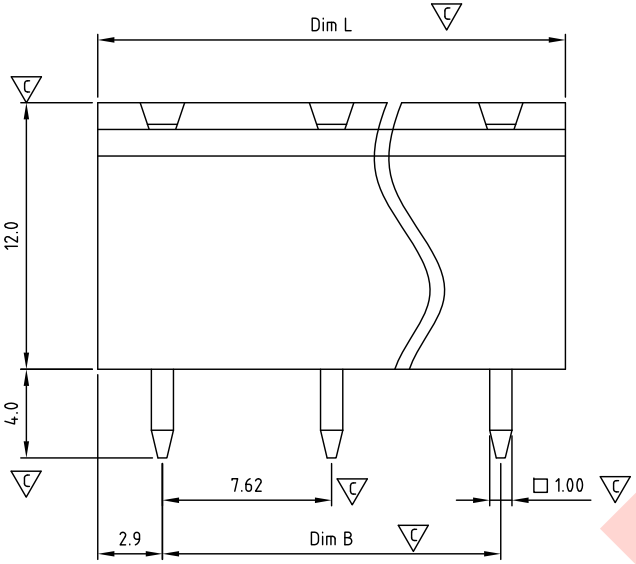

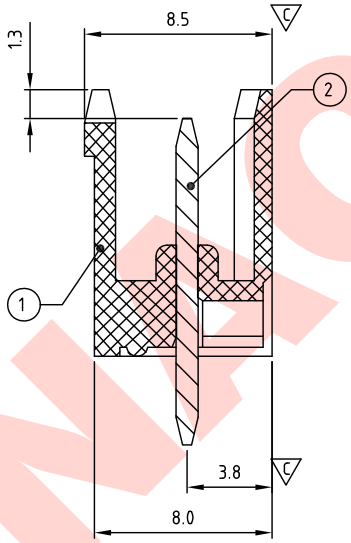

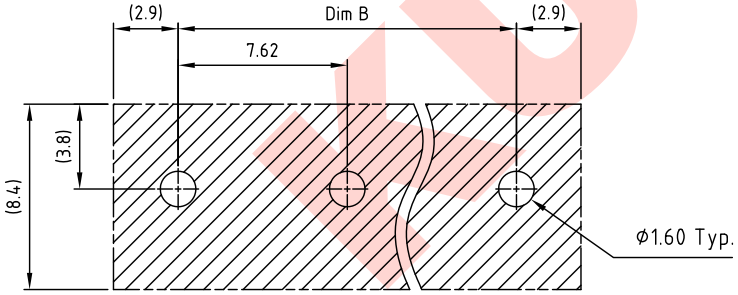

PCB LAYOUT

Technical data

1.Nominal voltage: 300V/15A
PITCH:7.62mm

2.Insulation Withstands Voltage:
AC 1600V/MIN

3.Insulation Resistace:
1000MΩ or more at DC500V

4.Using temperature range:-40C°~115C°

5.Soldering temperature range:250C°±10C°/5sec

6.Safety approval:

7.RoHS Compliance

8.Critical dimension:

9.Undimen sioned Tolerances:

Dim.L=(P-1)x7.62+5.82
Dim.B=(P-1)x7.62
P= number of poles 2-16P

	Dim B	Dim L
0-30mm	±0.15	±0.20
over 30mm-60mm	±0.20	±0.25
over 60mm-90mm	±0.25	±0.30
over 90mm	±0.30	±0.40

HAAV762 xx x xxx
①② ③

① Poles 02-16
② Color
0 Black 3 Orange 5 Green 6 Blue G Pale gray.....
③ Custom
000 K MARK 00K KUNACON MARK.....

ITEM	NAME OF PART	MATERIAL	NOTES	Q"TY
2	PIN	COPPER	TIN PLATED	P
1	BODY	PA66 UL94V-0	ALL COLOR	1

DWG.	WF. Zhang	DATE	2016.03.10	UNITS:	MM	SHEET:	1 OF 1
CHK.	WF. Zhang	DATE	2016.03.10	SCALE:	NONE 3:1 (:)	REV.: A	
APP.	Marvin Zhang	DATE	2016.03.31	TITLE:	HA-AV762 Serles Open type Vertical (180D)		
				PART NO.	HAAV762xxxxxx		
				DWG NO.	HA-A762-B001		

Tolerance
X. ±0.50
X.X ±0.30
X.XX ±0.10
X° ±1°

KUNA Contact Technology Co, Ltd
http://www.kunacon.com

SIGN	DESCRIPTION	CHK.	DATE
1			

KUNACON